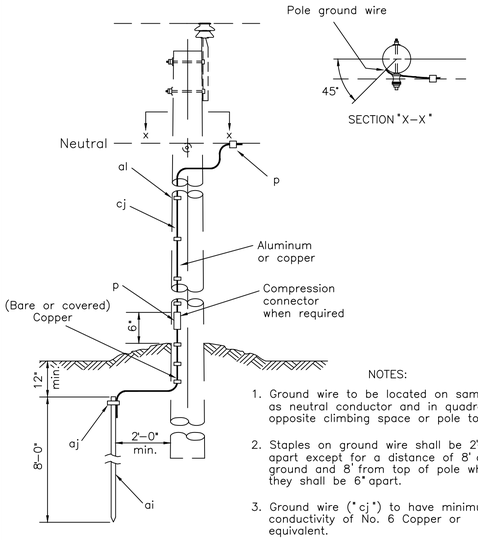

NOTES:

1. Ground wire to be located on same side as neutral conductor and in quadrant opposite climbing space or pole top pin.
2. Staples on ground wire shall be 2'–0" apart except for a distance of 8' above ground and 8' from top of pole where they shall be 6" apart.
3. Ground wire ("cj") to have minimum conductivity of No. 6 Copper or equivalent.
4. Use copper plated ground rod, copper ground wire and staples, OR, use galvanized steel ground rod, staples and aluminum ground wire.

ITEM	QTY	MATERIAL
p		Connector, compression, as req'd
ai	1	Rod, ground, 5/8" min. diameter
aj	1	Clamp, ground rod
al		Staple, ground wire, as req'd
cj		Wire, pole ground, as req'd

GROUNDING ASSEMBLY – GROUND ROD TYPE

H1.1

NOTES:

1. RUS H1.1 IS A TYPICAL GROUNDING ASSEMBLY AND SHOWN FOR REFERENCE ONLY.
2. GROUND WIRE ("cj") TO HAVE MINIMUM CONDUCTIVITY OF 1/0 AWG OR EQUIVALENT.
3. NEUTRAL TO BE REMOVED AND STATIC FRAMED ABOVE PHASE CONDUCTORS.
4. STATIC TO BE GROUNDED TO GROUND ROD.

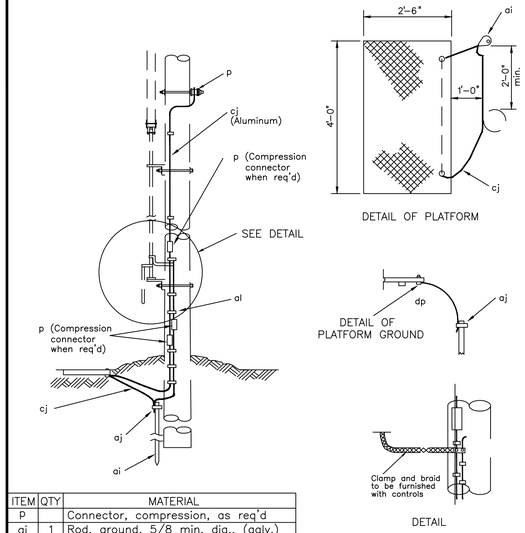

NOTE: Wear rubber gloves when operating switch.

ITEM	QTY	MATERIAL
p		Connector, compression, as req'd
ai	1	Rod, ground, 5/8 min. dia., (galv.)
aj	1	Clamp, ground rod, (galvanized steel)
al		Staple, ground wire, (galv.), as req'd
cj		Wire pole ground, as req'd Soft annealed iron, 5/16" with class C galvanizing
dp	2	Clamp, ground wire, with lock washer
	1	Platform, grounding plate, galv. iron

GROUNDING ASSEMBLY – PLATFORM TYPE
(FOR SECTIONALIZING AIRBREAK SWITCH)

APRIL 2005		H4.1
RUS		(M2–15A)

NOTES:

1. RUS H4.1 IS A TYPICAL GROUNDING ASSEMBLY AND SHOWN FOR REFERENCE ONLY.
2. GROUND WIRE ("cj") TO HAVE MINIMUM CONDUCTIVITY OF 1/0 AWG OR EQUIVALENT.
3. SWITCH TO HAVE GROUND MAT APPROX. 6" FROM CENTER OF SWITCH CONTROL ROD

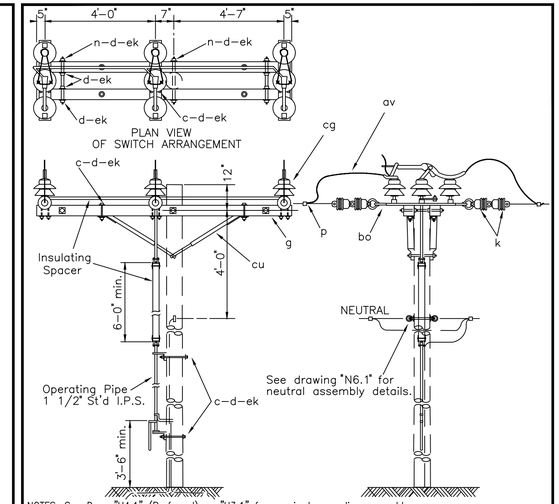

NOTES: See Dwg. "H4.1" (Preferred) or "H3.1" for required grounding assembly.
RUS accepted pre-assembled, group operated, airbreak switches may be used. Install according to manufacturer's instructions.

ITEM	QTY	MATERIAL
c	4	Bolt, machine, 1/2" x req'd length
c	15	Bolt, machine, 5/8" x req'd length
d	4	Washer, round, 1 3/8"
d	25	Washer, square, 2 1/4"
d	2	Washer, square, 3"
g	2	Crossarm, 3 5/8" x 4 5/8" x 10'–0"
k	12	Insulator, suspension, 4 1/4"
n	4	Bolt, double arm, 5/8" x req'd length
p		Connectors, as required

ITEM	QTY	MATERIAL
aa	2	Nut, eye, 5/8"
av		Jumpers, as required
bo	6	Shackle, anchor
cg	1	Switch, airbreak, group operated
		15 kV, w/ operating mechanism
cu	2	Brace, wood, 60" span
ek	33	Locknuts

GROUP–OPERATED AIRBREAK SWITCH
(THREE–PHASE)

APRIL 2005	3 – PHASE PRIMARY	S2.32
RUS	12.47/7.2 kV	(M3–15)

NOTES:

1. RUS S2.32 IS A TYPICAL GOAB SWITCH ASSEMBLY AND SHOWN FOR REFERENCE ONLY.
2. UTILIZE G19SLFR1223 RISER GROUNDING SWITCH AND REQUIRED HARDWARE ON POLE.
3. UTILIZE DEDICATED CROSSARM FOR GOAB ALTERNATIVE AND FRAME 4' BELOW PHASE CROSSARM.

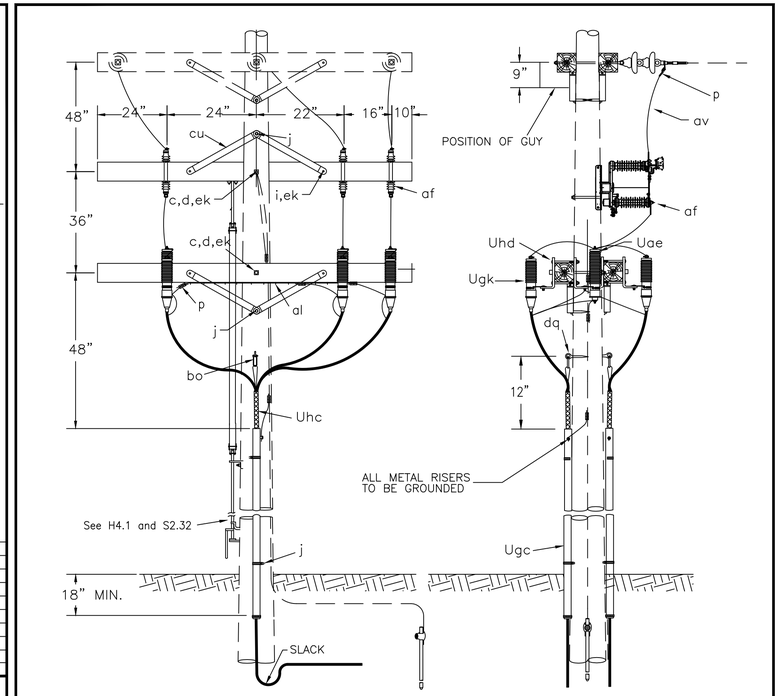

ITEM	QTY.	MATERIAL
c	2	Bolt, machine, 5/8" x required length.
d	2	Washer, square 2 1/4".
g	1	Crossarm, 3 5/8" x 4 5/8" x 8'–0"
i	4	Bolt, carriage, 3/8" x 4 1/2"
j		Screw, lag 1/2" x 4" as required.
p		Connectors, as required.
aa	1	Eyenut, 5/8"
af	1	Switch
al		Staples, as required.
av		Jumpers, as required.
bo	1	Anchor, shackle.
cu	4	Brace, wood, 28"
dq	1	Eye screw, elliptical or drive hook.
ek	6	Locknuts, as required.
Uae	3*	Surge arrester
Ugc	2	Cable riser shield. Length as required.
Ugk	6	Cable termination.
Uhc	6	Cable support.
Uhd	2	Crossarm mounting bracket.

NOTES:

1. TOTAL ARRESTER LEAD LENGTH MUST BE UNDER 3'.
2. NO BENDS PERMITTED WITHIN 6" OF CABLE TERMINAL BASE.
3. ALLOW MINIMUM CABLE SLACK OF 24" AT BOTTOM OF RISER.

THREE PHASE CABLE TERMINAL POLE
WITH CUTOUTS AND CROSSARM
MOUNTING ARRESTERS

	2000	UC1

NOTES:

1. INSTALL 2–HOLE NEMA PAD LUGS BACK TO BACK ON LOAD SIDE AND RUN PARALLEL 500 MCM CIRCUITS DOWN RISERS.
2. STATIC TO BE GROUNDED TO GROUND ROD.
3. RISER GROUNDING SWITCH, af IN DRAWING, IS A TEMPORARY PLACEHOLDER. ACTUALLY DETAILED VENDOR DRAWING OF THE SWITCH ARE NOT YET AVAILABLE. THIS DRAWING WILL BE UPDATED AND COMMENT REMOVED WHEN VENDOR DRAWING IS AVAILABLE.

ISSUE	DATE	DESCRIPTION
0	6/8/22	ISSUE_FOR_CONSTRUCTION

PROJECT MANAGER Trevor Hauck

PROJECT NUMBER 10333743

LICENSED PROFESSIONAL ENGINEER
REG. NO. 15500
TREVOR HAUCK
SOUTH DAKOTA
6/8/2022

Sanford Underground Research Facility
South Dakota Science and Technology Authority

EAST SUBSTATION CABLE REPLACEMENT OVERHEAD ASSEMBLY DETAILS

0 1" 2"

FILENAME SURF_E-105

SCALE NTS

SHEET E105