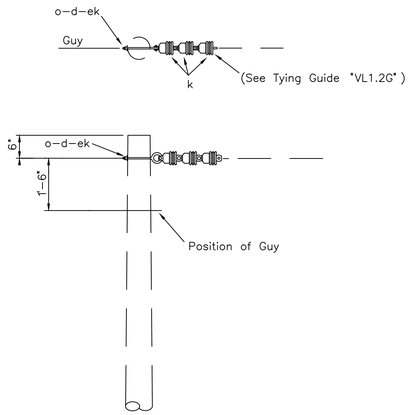

NOTES:

1. VA5.2, VA5.3 or VA5.4 may be used instead of assembly shown.
2. When more than one guy is required, install top guy 6" below primary assembly and use VA5.4 or install 12" guy strain insulator ("w") at top of guy.

ITEM	QTY	MATERIAL
d	2	Washer, square, 3", curved
k	3	Insulator, suspension, 4 1/4"
o	2	Bolt, eye, 3/4" x req'd length
ek	2	Locknuts

DESIGN PARAMETERS:
ALLOWABLE LONGITUDINAL LOAD = 5000 lbs./Conductor

SINGLE DEADEND

DEC 1998	1 – PHASE PRIMARY 24.9/14.4 kV	VA5.1
RUS		

NOTES:

1. RUS VA5.1 IS A TYPICAL DEADEND ASSEMBLY AND SHOWN FOR REFERENCE ONLY.
2. UTILIZE ARP–46SKCE–SHP SUSPENSION INSULATORS.
3. STATIC FRAMED ABOVE PHASE CONDUCTORS.
4. STATIC TO BE GROUNDED TO GROUND ROD.

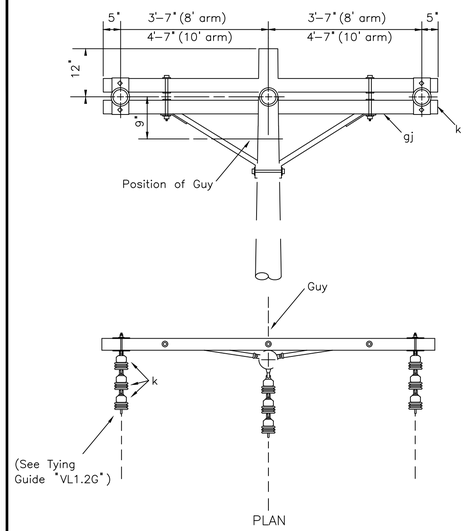

ITEM	QTY	MATERIAL
d	1	Washer, square, 3", curved
k	9	Insulator, suspension, 4 1/4"
o	1	Bolt, eye, 3/4" x req'd length
ek	1	Locknuts
gj	1	Crossarm Assembly

DESIGN PARAMETERS:
ALLOWABLE LONGITUDINAL LOAD EQUALS LESSER OF: 5,000 lbs/Conductor, or Manufacturer's Specifications

SINGLE DEADEND ON CROSSARM ASSEMBLY

DEC 1998	3 – PHASE PRIMARY 24.9/14.4 kV	VC5.71L
RUS		

NOTES:

1. RUS VC5.71L IS A TYPICAL DEADEND ASSEMBLY AND SHOWN FOR REFERENCE ONLY.
2. UTILIZE PUPI DA4000120S3B9X2 FIBERGLASS CROSSARM AND REQUIRED HARDWARE ON POLE.
3. UTILIZE ARP–46SKCE–SHP SUSPENSION INSULATORS.
4. STATIC FRAMED ABOVE PHASE CONDUCTORS.
5. STATIC TO BE GROUNDED TO GROUND ROD.

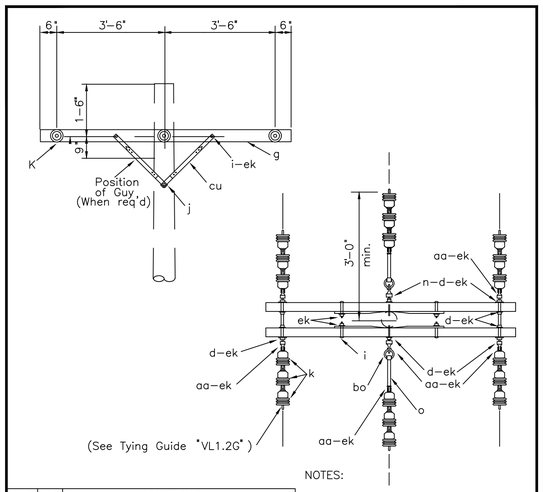

ITEM	QTY	MATERIAL
d	12	Washer, square, 2 1/4"
g	2	Crossarm, 3 5/8" x 4 5/8" x 8'–0"
i	4	Bolt, carriage, 3/8" x 4 1/2"
j	2	Screw, lag, 1/2" x 4"
k	18	Insulator, suspension, 4 1/4"
n	4	Bolt,double arming,5/8" x req'd length
o	2	Bolt, eye, 3/4" x req'd length
aa	8	Nut, eye, 3/4"
bo	2	Shackle, anchor
cu	4	Brace, 28"
ek	26	Locknuts

NOTES:

1. Not suitable for Grade B construction.
2. Double arming bolt, item "n," and eye nut, item "aa," may be replaced with double arming eye bolt, item "dy."
3. Maximum line angle may be increased to 15° by installing anchor shackles, item "bo," to (horizontal) eye nuts and installing side guys as req'd.
4. Designate as VC6.31 for assembly with three crossarms.

DESIGN PARAMETERS:
ALLOWABLE UNBALANCED LONGITUDINAL TENSION: (lbs./conductor)
VC6.21: 2,000 (#2 ACSR)
VC6.31: 3,000 (#2/0 ACSR)
MAXIMUM LINE ANGLE = 5°
(See Note 3)

DOUBLE DEADEND ON CROSSARMS

DEC 1998	3 – PHASE PRIMARY 24.9/14.4 kV	VC6.21
RUS		

NOTES:

1. RUS VC6.21 IS A TYPICAL DEADEND ASSEMBLY AND SHOWN FOR REFERENCE ONLY.
2. UTILIZE PUPI DA4000120E3B9X2 FIBERGLASS CROSSARM AND REQUIRED HARDWARE ON POLE.
3. UTILIZE ARP–46SKCE–SHP SUSPENSION INSULATORS.
4. STATIC FRAMED ABOVE PHASE CONDUCTORS.
5. STATIC TO BE GROUNDED TO GROUND ROD.

LIST OF MATERIALS

DWG. REF.	DESCRIPTION	ITEM	DET.	CODE No.
1	Clamp, Suspension (to 60°)	m		
2	Clamp, Cushioned Suspension	el		
3	Clamp, Cushioned Susp. & clevis Eye	el		
4	Anchor Shackle, 30,000 lbs. BNC	bo		
5	Yolk Plate			
6	Clamp, Bolted Deadend	l		
7	Clamp, Compression Deadend	l		
8	Link, Extension, Clevis 6"			
9	Jumper Connector, Compression	p		
10	Jumper Terminal, Compression			
11	3 Bolt Clamp, 6"			

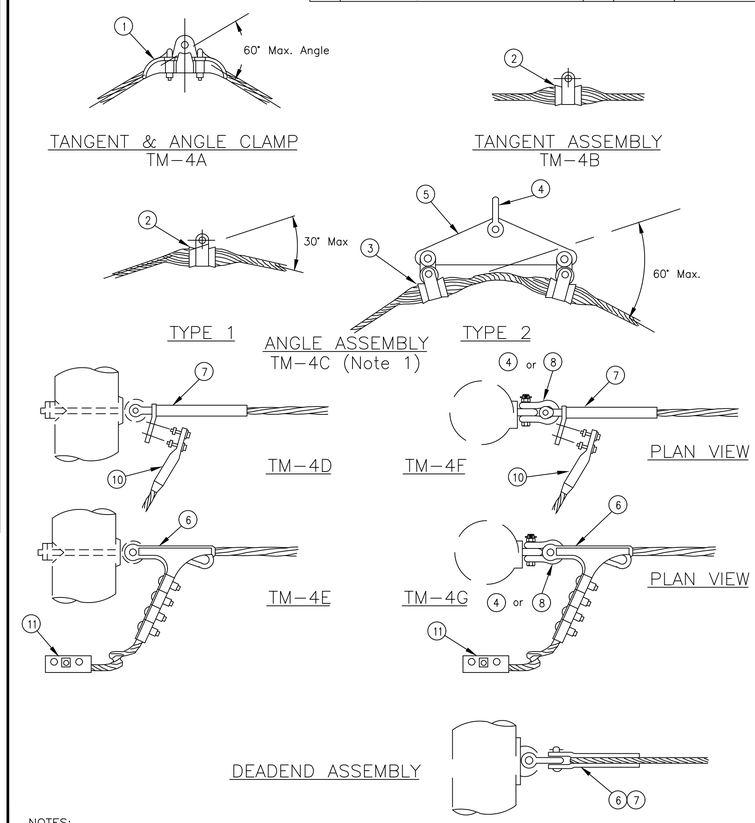

NOTES:

1. The appropriate cushioned suspension angle assembly shall be installed for the line angles shown on the plan–profile drawings:

   A. For angles from 0 degrees to 30 degrees, use type 1
   B. For angles from 30 degrees to 60 degrees, use type 2

O.H.G.W. ASSEMBLIES

CUSHIONED SUSPENSION AND SUSPENSION CLAMP

Reissued 03/98

NO.	REVISION	DATE

TM–4

NOTES:

1. REFER TO TM–4 FOR ALL STATIC FRAMING.

ISSUE	DATE	DESCRIPTION
0	6/8/22	ISSUE_FOR_CONSTRUCTION

PROJECT MANAGER Trevor Hauck

PROJECT NUMBER 10333743

LICENSED PROFESSIONAL ENGINEER REG. NO. 15500 TREVOR HAUCK SOUTH DAKOTA 6/8/2022

Sanford Underground Research Facility
South Dakota Science and Technology Authority

EAST SUBSTATION CABLE REPLACEMENT
OVERHEAD ASSEMBLY DETAILS

0 1" 2"

FILENAME SURF_E-106

SCALE NTS

SHEET E106